| E.C.N. | REV. | CHANGE | DATE | BY | DATE | CHK. |
|---|---|---|---|---|---|---|
| | | | | | | |

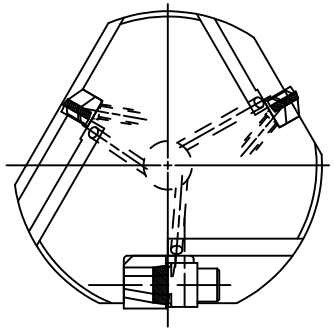

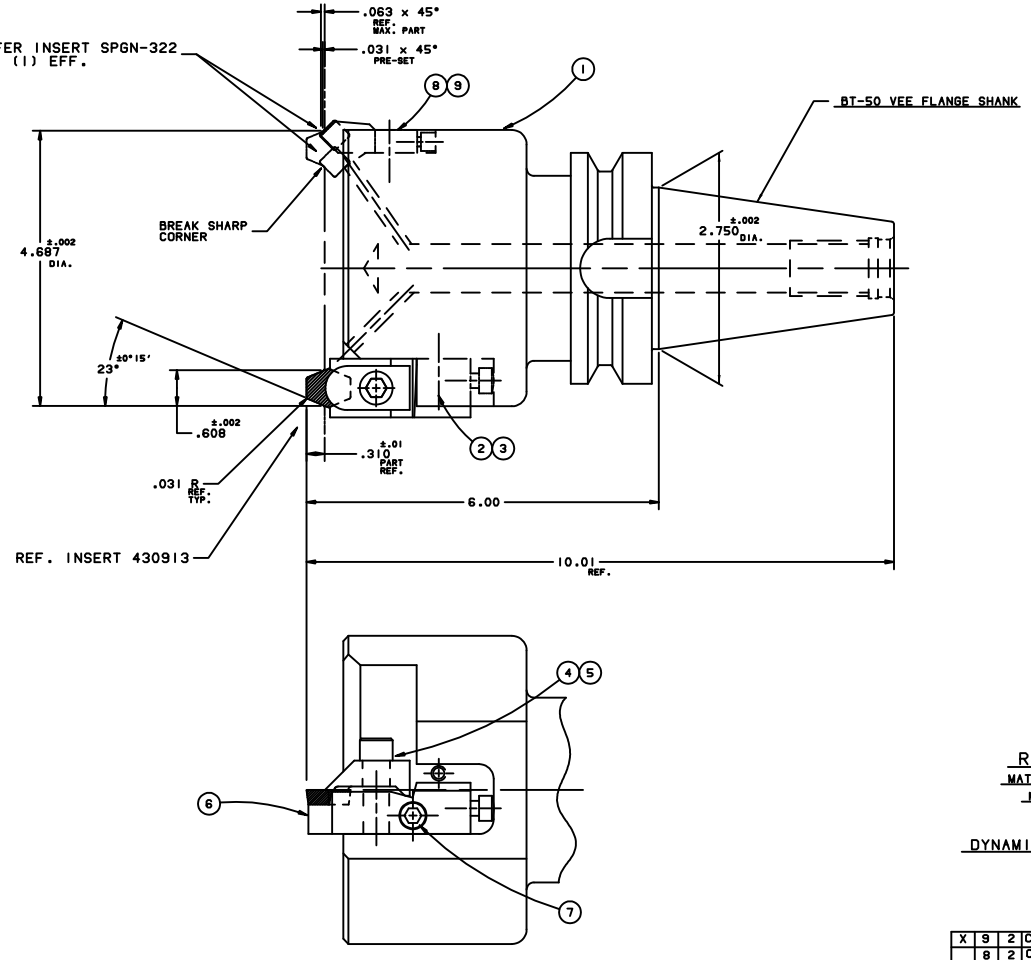


# BX-154

## RING GROOVE CUTTER

MAT'L. 4150 HT.TR. 35-39 R/C

MACHINE BX-154 RING GROOVE

DYNAMICLY BALANCE AT 1200 R.P.M.

| | | | | | | | |
|---|---|---|---|---|---|---|---|
| X | 9 | 2 | CART. SCREW | 1/4-20 x 3/4 | 31 | LHCS 1/4 20 | 001 |
| | 8 | 2 | CARTRIDGE | CHAM. | 07 | CSSPR10CW-3 | 000 |
| X | 7 | 1 | CART. SCREW | 5/16-18 x 1 1/2 | 31 | SHCS 5/16 18 | 006 |
| | 6A | | ADJ. SCREW | | 31 | AAS-2 | 000 |
| | 6 | 1 | CARTRIDGE | GROOVING | | | |
| X | 5 | 1 | CLAMP | | 09 | 430914 | 000 |
| X | 4 | 1 | CLAMP SCR. | 3/8-16 x 1 3/4 | 31 | SHCS 3/8 16 | 008 |
| X | 3 | 1 | WEDGE SCREW | | 31 | 33824 | 000 |
| X | 2 | 1 | WEDGE | | 04 | 413413 | 000 |
| | 1 | 1 | BAR | | | | |
| T.P. NO. | REV. NO. | NO. REQ'D. | DESCRIPTION | FINISH SIZE | | DWG. NO. | |

REF. 69262

NOTE: DEPENDING UPON AVAILABILITY MATERIAL MAY BE SUBSTITUTED WITH A SUITABLE EQUIVALENT OF EQUAL OR SUPERIOR QUALITY

STAMP GREENLEAF

BX-154
RING GROOVE
69591

UNLESS OTHERWISE SPECIFIED:
1. BREAK ALL SHARP EDGES
2. STAMP TOOL NUMBER
TOLERANCES:
3. ANGLES ±1/2°
4. 1 PLACE DECIMALS ±.030
5. 2 PLACE DECIMALS ±.010
6. 3 PLACE DECIMALS ±.005

| DR. | CH. | SCALE: |
|---|---|---|
| G.L.B. | | FULL |
| 12-28-06 | | |

DRAWING NO. 432 03 69591

Greenleaf

CUSTOMER'S NAME Q-57589 #68830